Shanghai Liangxin Electrical Co., Ltd.

NDM3E-400 Product Specification

(IPD-ENG-DEV-T20 A1 2016-09-23)

Prepared by	孙兰萍	Date	2021-09-29
Reviewed by	陈新明	Date	2021-09-30
Countersigned by	胡志斌	Date	2021-09-30
Approved by	丁飞	Date	2021-09-30

Revision History					
Version	Revision Reason/Content	Implementation Date	Prepared by	Reviewed by	Approved by
0	Newly added	2020/10/28	Sun Lanping	Chen Xinming	Ding Fei
1	Update the product appearance picture and product dimension outline drawing	2021/09/30	Sun Lanping	Chen Xinming	Ding Fei

1. Applicable Scope and Purpose of Circuit Breaker

The NDM3E-400 electronic molded case circuit breaker (hereinafter referred to as circuit breaker) applies to infrequent switching of circuits with the AC 50/60Hz, the working voltage of AC690V and working current of 400A as well as infrequent motor starting. With the overload, short circuit and undervoltage protection functions, the circuit breaker can protect lines and power equipment from damage. The circuit breaker can provide modules with the communication function, which can make the original circuit breaker upgrade to the communication circuit breaker conveniently, thus realizing "Four remotes" functions, namely, remote control, remote adjustment, remote measuring and remote measurement.

2. Product Picture of Circuit Breaker (The picture is for reference only; the specific kind prevail)

Picture of the Product

3. Specification and Model Description

ND	M	3	E	- 400	□	□ / □ / □	□	□	□	□	□	□	□
1	2	3	4	5	6	7 8 9	10	11	12	13	14	15	16

SN	SN name	NDM3E
1	Enterprise code	ND: “Nader” low-voltage apparatus
2	Product code	M: Molded case circuit breaker (MCCB)
3	Design SN	3
4	Derived code of the series	E: Electronic
5	Shell frame level	400
6	Breaking capacity level	M: Relatively high breaking type
		H: High breaking type
7	Operation mode	No code: Direct handle-operated mode
		P: Motor-operated
		Z: Rotation handle
8	Derived code of the function	No code: Basic type intelligent release
		G: Ground protection type intelligent release
		T: Communication type intelligent release
		GT: Ground protection communication type intelligent release
9	Number of poles	3, 4
10	Accessory code	See Table 1
11	Application code	No code: Power distribution type
		2: Motor protection type
12	N-pole (neutral pole) type of the 4P product	C: The N-pole is installed with an overcurrent tripper, and on-off with the other three poles
		D: The N-pole is installed with an overcurrent tripper, but always connected
13	Special use	Q: Voltage-check self-reset
14	Special function code	I: Non-tripping at the time of alarming
15	Setting current	See Table 2
16	Cabling type	No code: Normal product
		P: Connection busbar
		Z1: Rear-plate connection
		Z2H: Plug-in rear-plate connection
		Z2Q: Plug-in front-plate connection
		Z3H: Integrated plug-in rear-plate connection
		Z3Q: Integrated plug-in front-plate connection

Table 1: Comparison Table of Accessory Code:

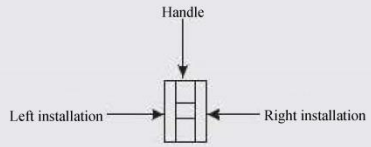

Legend
- Single auxiliary contact
- Dual-auxiliary contact
- Alarm contact
- Shunt release
- Under-voltage release
- Auxiliary alarm contact (a single accessory features the auxiliary and alarm functions)

Accessory code / Accessory name / Installation Position / Model / Number of poles	NDM3E-400 (Non-communication type) 3	NDM3E-400 (Non-communication type) 4
300 N/A	——	
310 Shunt release		●
320 Dual-auxiliary contact	◧	
321 Single auxiliary contact	◧	
330 Under-voltage release	○	
340 Shunt release, dual-auxiliary contact	◧	●
341 Shunt release, single auxiliary contact	◧	●
350 Shunt release, under-voltage release	○	●
360 Two sets of single auxiliary contacts	◧	◧
361 Two sets of dual-auxiliary contacts	◧	◧
362 Dual-auxiliary contact, single auxiliary contact	◧	◧
370 Under-voltage release, dual-auxiliary contact	○	◧
371 Under-voltage release, single auxiliary contact	○	◧
308 Alarm contact	□	
318 Shunt release, alarm contact	□	●
328 Dual-auxiliary contact, alarm contact	□	◧
338 Under-voltage release, alarm contact	○	□
348 Shunt release, auxiliary alarm contact	◨	●
358 Auxiliary alarm contact	◨	
368 Dual-auxiliary contact, auxiliary alarm contact	◨	◧
378 Under-voltage release, auxiliary alarm contact	○	◨

Accessory code / Accessory name / Installation Position / Model / Number of poles	NDM3E-400 (Communication type) 3	NDM3E-400 (Communication type) 4
300 None/communication type	——	
320 Dual-auxiliary contact/communication type	◧	
321 Single auxiliary contact/communication type	◧	
330 Undervoltage release/communication type	○	
361 Two sets of dual-auxiliary contacts	◧	◧
362 Dual-auxiliary contact, single auxiliary contact/communication type	◧	◧
371 Under-voltage release, single auxiliary contact/communication type	○	◧
308 Alarm contact/communication type	□	
338 Under-voltage release, alarm contact/communication type	○	⊏
358 Auxiliary alarm contact/communication type	◨	

Note :

1) The first number "3" of the release accessory code represents the intelligent controller with the three-section protection while the last two numbers represent the inner accessory code;

2) Since the communication type requires to use a set of right-side auxiliary contacts, the single auxiliary or alarm contact output is only located on the right side of the above accessory mode.

3) “I” in “32**I” identifies overload alarm without tripping, with output function, and the last two digits ** identify internal accessory code.

4. Main Technical Parameters of Circuit Breaker

Table 2 Main Technical Parameters of Circuit Breaker

<table>
<tr><td colspan="3">Model</td><td colspan="3">NDM3E-400</td></tr>
<tr><td colspan="3">Rated current of frame Inm (A)</td><td colspan="3">400</td></tr>
<tr><td colspan="3">Setting current I_R(A)</td><td colspan="3">200, 225, 250, 280, 315, 350, 400</td></tr>
<tr><td colspan="3">Rated insulation voltage Ui (AC V)</td><td colspan="3">1000</td></tr>
<tr><td colspan="3">Rated impulse withstand voltage Uimp (V)</td><td colspan="3">8000</td></tr>
<tr><td colspan="3">Rated working voltage Ue (AC V)</td><td colspan="3">380/400/415, 660/690</td></tr>
<tr><td colspan="3">Power frequency withstand voltage U (1min) (V)</td><td colspan="3">3500</td></tr>
<tr><td colspan="3">Utilization category</td><td colspan="3">B</td></tr>
<tr><td colspan="3">Short-time withstand current Icw (kA/1s)</td><td colspan="3">5</td></tr>
<tr><td colspan="3">Number of poles</td><td colspan="2">3</td><td>4</td></tr>
<tr><td colspan="3">Breaking capacity level</td><td>M</td><td>H</td><td>/</td></tr>
<tr><td rowspan="2">Rated limit short-circuit breaking capacity Icu (kA)</td><td colspan="2">AC380/400/415V</td><td>70</td><td>100</td><td>70</td></tr>
<tr><td colspan="2">AC660/690V</td><td>20</td><td>/</td><td>20</td></tr>
<tr><td rowspan="2">Rated operating short-circuit breaking capacity Ics (kA)</td><td colspan="2">AC380/400/415V</td><td>65</td><td>70</td><td>65</td></tr>
<tr><td colspan="2">AC660/690V</td><td>15</td><td>/</td><td>15</td></tr>
<tr><td rowspan="3">Operating performance (times)</td><td colspan="2">Electrical life</td><td colspan="3">7500</td></tr>
<tr><td rowspan="2">Mechanical life</td><td>Maintainable free life</td><td colspan="3">15000</td></tr>
<tr><td>Maintainable life</td><td colspan="3">30000</td></tr>
</table>

4.1 Selection of the circuit breaker connecting bus or cable cross-section area:

Table 3 Selection of the NDM3E-400 Connecting Bus or Cable Cross-section Area

Rated current (A)	200, 225	250	280, 315, 350	400
Wire cross-section area (mm^2)	95	120	185	240

4.2 Tightening Torque of the Circuit Breaker Terminal and Mounting Screw

Table 4 Tightening Torque of the Circuit Breaker Terminal and Mounting Screw

Model	Thread diameter (mm)	Torque (N·m)
NDM3E-400	M10	20
	M6	6

4.3 Derating factor of temperature change for the circuit breaker

Table 5 Derating Factor Table of Temperature Change for the Circuit Breaker

Model	Derating factor of product temperature change							
NDM3E-400	Temperature (℃)	40	45	50	55	60	65	70
	Derating factor	1	1	1	0.978	0.957	0.934	0.911

Note: 1) When the operating ambient temperature is below 50℃, the product can be used normally without derating capacity;

2) The above derating factors are measured at the frame current.

4.4 High-altitude derating factor of the circuit breaker

Table 6 High-altitude Derating Factor Table of Circuit Breaker

Elevation (m)	Working current correction coefficient	Maximum working current correction coefficient (V)	Power frequency withstand voltage correction coefficient (V)	Isolation voltage correction coefficient (V)
2000	1	690	3500	1000
2500	1	690	3500	1000
3000	0. 98	620	3150	900
3500	0. 97	580	3000	850
4000	0. 95	550	2800	810
4500	0. 94	520	2650	770
5000	0. 93	500	2500	730

5. Normal Working Environment of Circuit Breaker

1) The altitude of the installation site doesn't exceed 2,500m. See the "High-altitude Derating Factor Table of Circuit Breaker" for the derating factor at the altitude;
2) The ambient temperature is -35℃ ~ + 70℃; the average within 24 h shall not be more than +35℃. If the ambient temperature is higher than +50℃, the user needs to reduce the capacity. See the "Derating Factor Table of Temperature Change for the Circuit Breaker" for the derating factor;
3) Its relative humidity at an ambient temperature of +40℃ should not exceed 50%. A higher relative humidity is allowed at a lower temperature. For example, the relative humidity at 20℃ can reach 90%; for frost due to temperature change, the corresponding measures should be taken;
4) The product can withstand the effects of wet air, salt mist, oil mist and mould;
5) The installation category of the circuit breaker connected to the main loop is: Category Ⅲ (power distribution and control level), The installation category of the circuit breaker not connected to the main loop is: Category Ⅱ (load level);
6) The pollution level is Level 3;
7) The product should be installed in places that are free from explosive media, media corrosive to metal, insulation damaging gas, and conductive dust, which should be also avoided from snow and rain;
8) In case of stricter user conditions than the above description, negotiate with the manufacturer.

6. Short-circuit Overload Protection Characteristic Curve of Circuit Breaker

6.1 Long time-delay, short time-delay and instantaneous protection characteristic curve of power distribution type

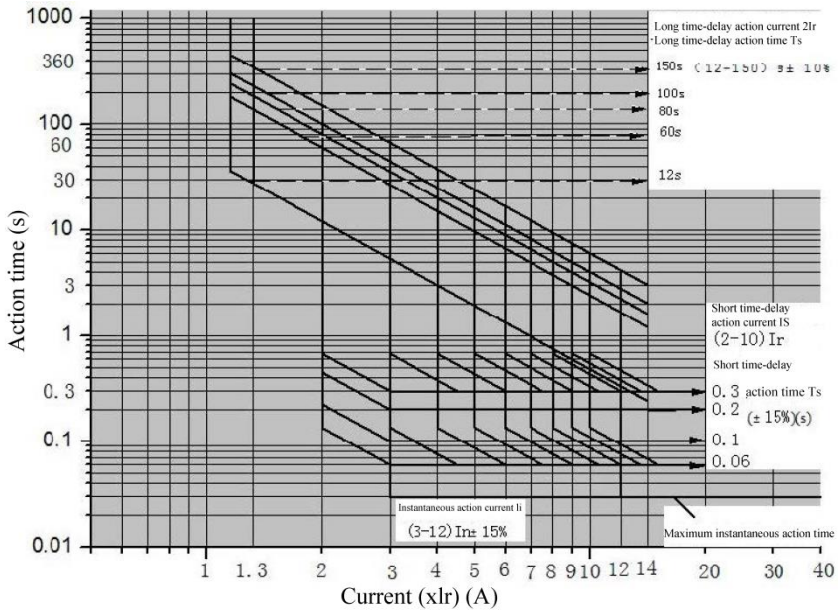

Time/Current Characteristic Curve

6.2 Ground protection characteristic curve of power distribution type

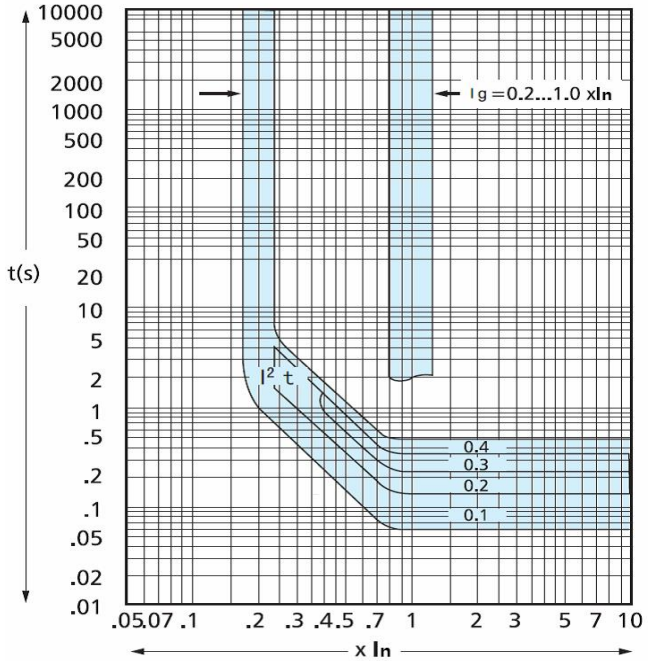

Ground protection characteristic curve

6.3 Setting value of the intelligent controller

Table 7: Basic type

Model	Shell frame level Rated current In(A)	Current and time parameters							
		I_R (A)	T_R(s)	Isd(*I_R)	Tsd(s)	Ii(*In)	Ip(*I_R)	I_{RN}(*I_R)	T_{RN}(s)
NDM3E-400 3P	400	200, 225 250, 280 315, 350 400, OFF	12 60 100 150 OFF	2,3, 4 5, 6, 7 8, 10, OFF	0.06 0.1 0.2 0.3	3, 4, 5 6, 7, 8 9, 10, 12 14	0.7, 0.8 0.9, 1.0	/	/
NDM3E-400 4P							Built-in 0.9	0.5, 1.0 OFF	T_R

Table 8: Ground Type

Model	Shell frame level Rated current In(A)	Current and time parameters							
		I_R(A)	T_R(s)	Isd(*I_R)	Tsd(s)	Ii(*In)	Ip(*I_R)	Ig(*In)	Tg(S)
NDM3E-40 0	400	200, 225 250, 280 315, 350 400, OFF	12 60 100 150 OFF	2,3, 4 5, 6, 7 8, 10, OFF	Built-in 0.3	3, 4, 5 6, 7, 8 9, 10, 12 14	Built-in 0.9	0.2, 0.3 0.4, 0.5 0.6, 0.8 1.0, OFF	0.1 0.2 0.3 0.4

Note: For the ground-type 4P product, I_{RN} can't be set with the factory default as 1.0I_R in case of no requirements for the order

Table 9: Communication Type

Model	Rated current of frame In(A)	Current and time parameters					
		I_R(A)	T_R(s)	Isd(A)	Tsd(s)	Ii(A)	Ip(A)
NDM3E-40 0	400	200-400, OFF In step of 1A	12, 60 100, 150, OFF	400-4000, OFF In step of 1A	0.06, 0.1 0.2, 0.3	1200-5600 In step of 1A	140-400 In step of 1A

Model	Rated current of frame In(A)	Current and time parameters	
		I_{RN}(*I_R)	T_{RN}(s)
NDM3E-40 0 4P	400	0.5, 1.0, OFF	T_R

Table 10: Ground Communication Type

Model	Rated current of frame In(A)	Current and time parameters							
		I_R (A)	T_R(s)	Isd(A)	Tsd(s)	Ii(A)	Ip(A)	Ig(*In)	Tg(S)
NDM3E-400	400	200-400, OFF In step of 1A	12, 60 100, 150 OFF	400-4000, OFF In step of 1A	0.06 0.1 0.2 0.3	1200-5600 In step of 1A	140-400 In step of 1A	80-400 OFF In step of 1A	0.1, 0.2 0.3, 0.4

Model	Rated current of frame In(A)	Current and time parameters	
		I_{RN}(*I_R)	T_{RN}(s)
NDM3E-400 4P	400	0.5, 1.0, OFF	T_R

Note: 1. When I_R is in the OFF position, the long and short time-delay is closed at the same time; when Isd is in the OFF position, the short time-delay is closed;

2. When the 4P product adopts the basic type, Ip can't be set with the factory default as 0.9I_R in case of no requirements for the order;

3. When the product adopts the ground type, Tsd can't be set with the factory default as 0.3s in case of no requirements for the order;

4. When the product adopts the ground type, Ip can't be set with the factory default as 0.9I_R in case of no requirements for the order;

5. When the 4P product adopts the ground type, I_{RN} can't be set with the factory default as 1.0I_R in case of no requirements for the order;

6. The gear setting of the communication type product needs to be performed by the upper computer, and it is not displayed on the control panel.

6.4 Protection characteristics of power distribution-type circuit breaker

Table 11: Protection Characteristics of Intelligent Release

Overload long time-delay protection I_R, T_R					
Setting current I_R		See Table 7 or 8			
Action features (reverse time limit)	T_R setting value (s)	In = 400A			
		12	60	100	150
	≤1.05I_R	＞2h inaction			
	＞1.30I_R	＜1h action			
	t(s) at 1.5I_R	21.3	106.7	177.8	266/7
	t(s) at 2.0I_R	12	60	100	150
	t(s) at 6.0I_R	1.33	6.67	11.11	16.66
	t(s) at 7.2I_R	0.93	4.63	7.72	11.57
	Accuracy (%)	±10			

Note: The action curve conforms to $t=(2I_R/I)^2\times T_R$

t: overload long time-delay action time T_R: setting value of the overload long time-delay action time

I: Actual running current I_R: setting value of the overload long time-delay action current

Short circuit short-time delay protection Isd, Tsd						
Setting current Isd			See Table 7 or 8			
Action characteristics	Reverse time limit Isd≤I＜1.5Isd	Tsd setting value (s)	0.06	0.1	0.2	0.3
		t action time (s)	$t=(1.5Isd/I)^2\times Tsd$			
	Fixed time limit 1.5Isd≤I＜Ii	t action time (s)	0.06	0.1	0.2	0.3
		Returnable time (s)	/	/	0.14	0.21
		Accuracy (%)	±10(Inherent error±20)			

Note: The inverse time limit action curve conforms to $t=(1.5Isd/I)^2\times Tsd$

The reverse time limit is ON while the fixed time limit is OFF

t: short-circuit short time-delay action time Tsd: setting value of the short-circuit short time-delay action time

I: Actual running current Isd: setting value of the short-circuit short time-delay action current

Table 11 (Continued) Protection Characteristics of Intelligent Release

Short circuit instantaneous protection Ii						
Action characteristics		Setting current Ii	See Table 7 or 8			
		Action time	＜50ms			
Neutral wire protection I_{RN} T_{RN}						
Setting current Ip			See Table 7 or 8			
Action characteristics		T_{RN} action time	T_R			
		Accuracy (%)	±10			
Pre-alarm Ip						
Setting current Ip			See Table 7 or 8			
characteristics		Alarm indicator	The indicator changes to be constantly on from flashing			
		Accuracy (%)	±10			
Overload indicator (maximum load)						
characteristics		Current value range	1.15×I_R			
		Overload indicator	Constantly on			
		Accuracy (%)	±10			
Ground fault protection Ig, Tg						
Setting current Ig			(0.2, 0.3, 0.4, 0.5, 0.6, 0.8, 1.0)×I_n+OFF			
Action characteristics	Reverse time limit $I_g \le I_\Delta < 2I_g$	Tg setting value (s)	0.1	0.2	0.3	0.4
		t action time (s)	$t=(2I_{g/I})^2 \times T_g$			
	Fixed time limit $I_\Delta \ge 2I_g$	t action time (s)	0.1	0.2	0.3	0.4
		Accuracy (%)	±10			

Note: I: 3P product is A/B/C three-phase current vector sum, 4P product is A/B/C/N four-phase current vector sum.

Note: The inverse time limit action curve conforms to $t=(2I_g / I)^2 \times T_g$

t: Action time Tg: Setting time of ground protection

I: Actual operating current Ig: Setting current of ground protection

6.5 Overload alarm non-tripping signal output module

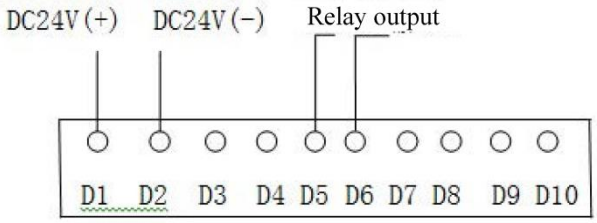

Wiring Connection Diagram of Output Module

Table 12: Table of Communication Module Terminals and Roles

Terminal code	Connection position	Input/output (IO)
D1	Power input DC24V(+)	Input
D2	Power input DC24V(-)	
D3	Reserved	Reserved
D4		
D5, D6	Alarm signal output	Output (DO)
D7, D8, D9, D10	Reserved	Reserved
L1, L2, L3, L4, L5		

Note: 1. Specification of the rated working voltage: DC 24V, allowed range: ±15%, power: ≤2W;

2. DO switch output: D5, D6 are dry contact signals, contact capacity: Resistive load DC 30V/5A, AC 270V/3A;

3. Closed during overload alarm. Disconnected when there is no overload or non-overload fault;

4. Signal output with overload 1.15IR, the shortest maintenance time of this alarm signal is 30s;

5. It is necessary to realize the function of overload alarm non-tripping. At this time, the corresponding controller should exit the long time-delay protection (long time-delay TR is set to OFF), otherwise the product will still protect the action;

6. When using the overload alarm non-tripping function, it is necessary to eliminate the fault as soon as possible to avoid line heating due to overload for a long time;

7. This accessory can't be used simultaneously with communication accessories.

7. Outline and Mounting Hole Dimensions of Circuit Breaker

7.1 Outline and Installation Dimensions of Circuit Breaker

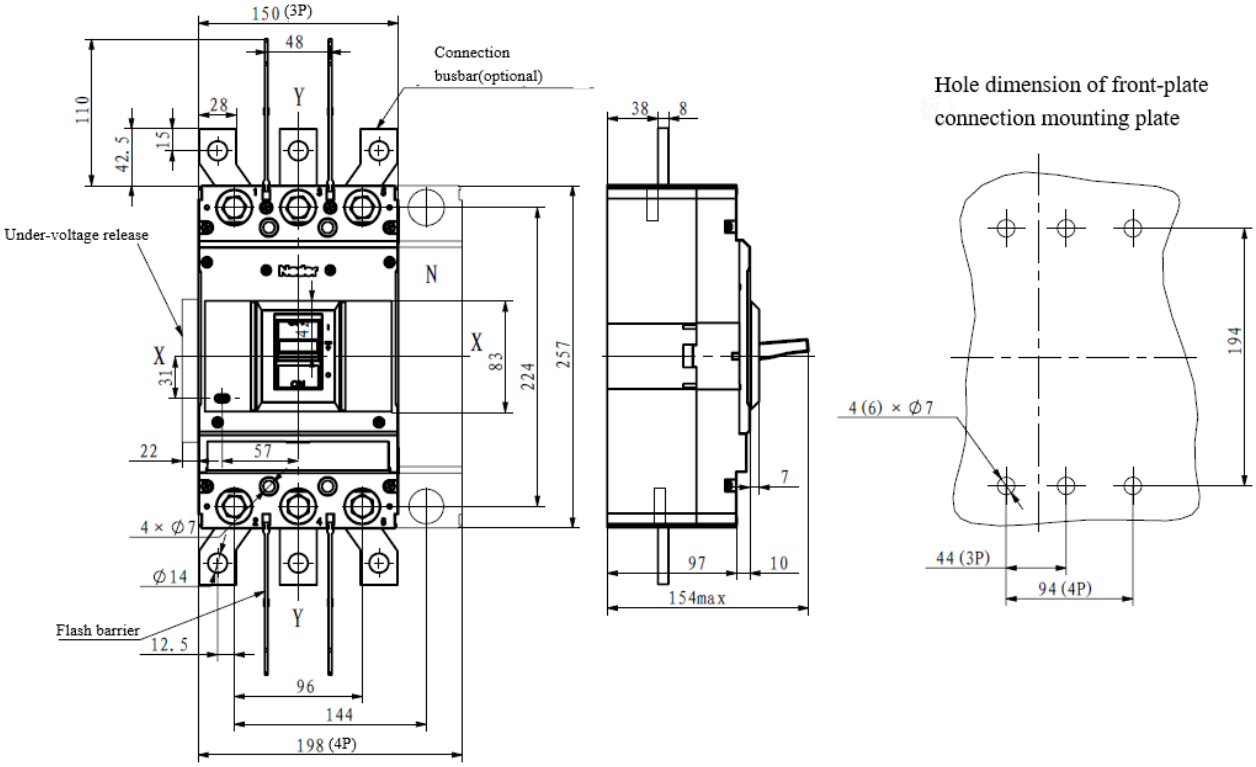

Note: The limit deviation not indicated with the tolerance dimensions is as per GB/T 1804-c.

7.2 Installation dimensions of communication backpack

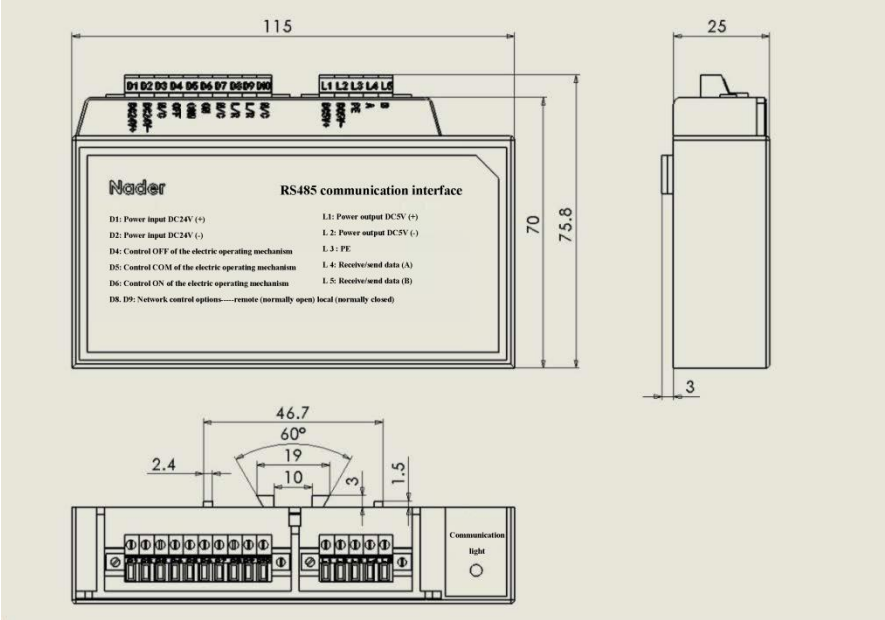

Note: The limit deviation not indicated with the tolerance dimensions is as per GB/T 1804-c.

7.3 Safe mounting distance of circuit breaker

Table 13 Insulation Distance Mounted in the Metal Cabinet (Unit: mm)

Mounting distance	A (inlet wire end to the cabinet face)		B (distance from side to the cabinet face)	C (outlet wire end to the cabinet face)
Model	With a terminal cover	Without a terminal cover		
NDM3E-400	25	120	35	35

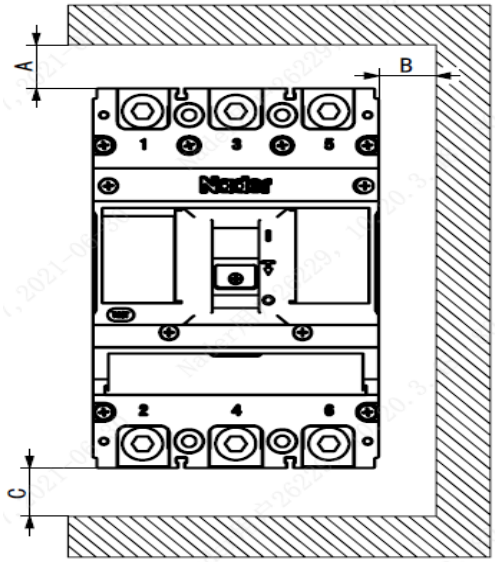

Table 14 Minimum Center Distance between Rowed Circuit Breakers (Unit: mm)

Model	Width of circuit breaker		Center distance	
	3 poles	4 poles	3 poles	4 poles
NDM3E-400	150	198	190	238

Note: Check the connected busbar or cable during rowing or stacking of the circuit breaker to ensure that the air insulation distance won't be reduced.

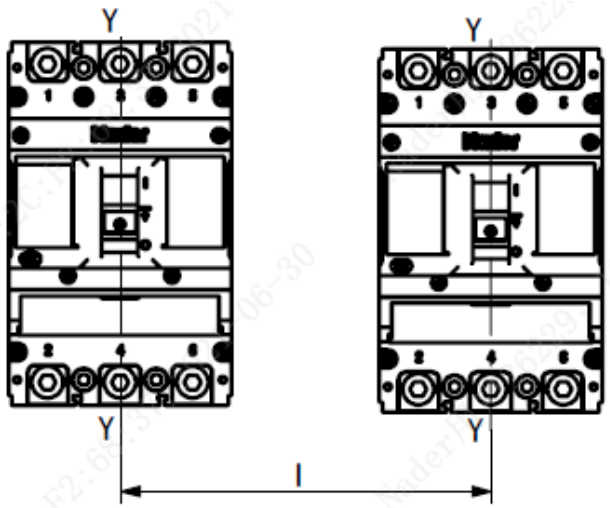

Table 15 Minimum Center Distance between Stacked Circuit Breakers (Unit: mm)

Model	H (distance of circuit breaker from bottom)	
	With a terminal cover	Without a terminal cover
NDM3E-400	155	155

Note: 1) Bare cable connection

2) Cable insulating connection

3) Connection without insulation

Requirements: Check whether the terminal cover or phase partition is assembled properly before products are energized.

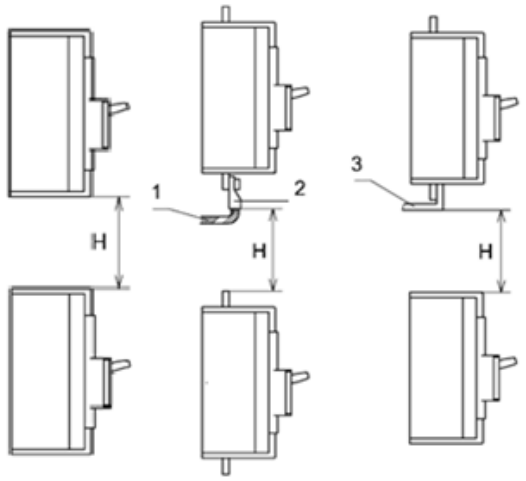

8. Installation Direction of Circuit Breaker

For vertical installation of the product, the gradient between the installation surface and the vertical plane is no more than ±22.5°.

Horizontal installation of the product.

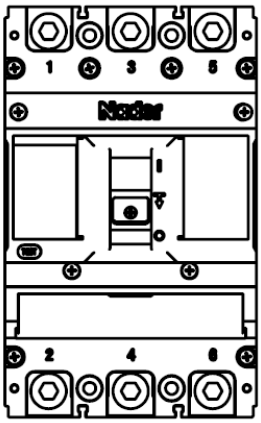

Vertical Installation

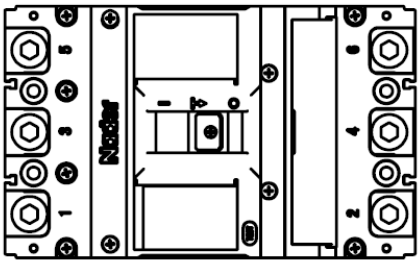

Horizontal Installation

9. Packaging and Storage of Circuit Breaker

Minimum packaging quantity: 1 piece/box. The packaged products should be stored in a warehouse with the air ventilation and the relative humidity no more than 80% when the ambient temperature is -40℃~+75 ℃. No acidic alkaline or other corrosive gas exists in the ambient air in the warehouse. Under the conditions above, the storage period shall be no more than three years since the manufacturing date.

10. Installation Direction of Circuit Breaker

SN	Name	Specification	3P Quantity/Set	4P Quantity/Set
1	Cross small pan-head screw	M6×70	4	6
2	Hexagon nut	M6	4	6
3	Spring washer	6	4	6
4	Plain washer	6	8	12
5	Plug	——	6	8
6	Phase partition	——	4	6

11. Circuit Breaker Notes

1) Various characteristics and accessories of the circuit breaker are set in the factory. The circuit breaker, tripping unit or other accessories can only be adjusted, installed and maintained by the trained or qualified professionals according to the parameter requirements of the line design;

2) Ensure that the power supply is off before installing or removing any device;

3) The circuit breaker handle can be located in three positions, indicating three states: on, off and free tripping. When the handle is in the free tripping position, pull the handle in the off direction when the circuit breaker is connected and on.